Richmond
INTERIORS

ASSEMBLY INSTRUCTION

Item# - 215704 - Opal

PLEASE READ CAREFULLY AND SAVE THESE INSTRUCTIONS, AS YOU MAY NEED THEM AT A LATER DATE.

WARNING! SHUT POWER OFF AT FUSE OR CIRCUIT BREAKER.

All electrical connections must be in accordance with local and National Electrical Code (N.E.C.) standards. If you are unfamiliar with proper electrical wiring connections, obtain the services of a qualified electrician.

GENERAL

Remove all parts and hardware from the box and the mounting package and make sure that none are missing by referencing the illustrations provided.

ASSEMBLY AND INSTALLATION

1. Drill two holes into the wall and insert plastic anchors (A). Then screw mounting screw (B) as desired.
2. Connect the fixture to a suitable ground in accordance to local electrical codes. Before connecting the wires, make sure the power is shut off. Connect the wires to the terminals (see diagram below).

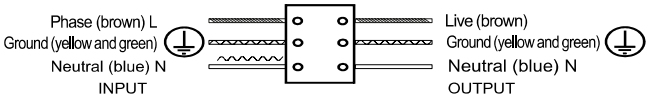

3. Neatly place all the wires.
4. Make sure that the wires do not come into contact with any hot parts of the lamp.
5. Do not turn the power back on until installation is complete.
6. Install 2 (Two) light bulb (D) (not included) into the holder (E).
7. Refer to the label on the lamp socket for Max Wattage information.
8. Hang your fixture (F) to mounting screws.
9. Installation is complete, turn on power at fuse or circuit breaker.

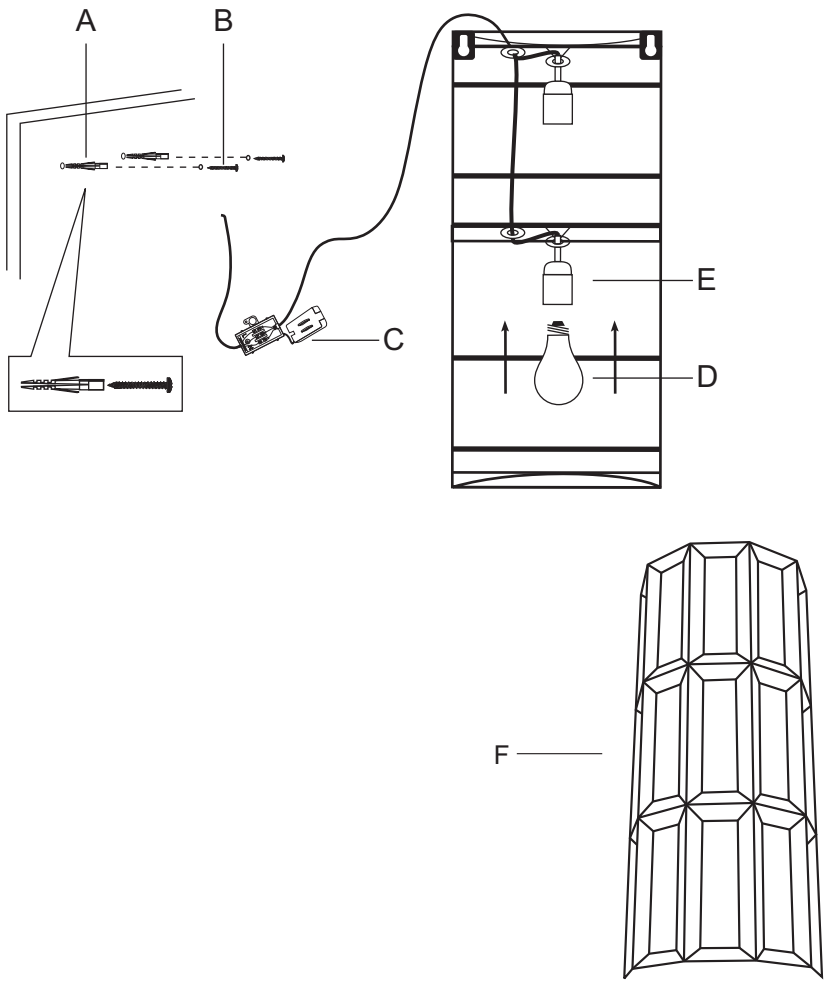

CONTENTS :

A. PLASTIC ANCHOR
B. MOUNTING SCREWS
C. TERMINAL BOX (pre-attached to wire)
D. BULB ***(NOT INCLUDED)***
E. BULB HOLDER (pre-attached)
F. FIXTURE