1

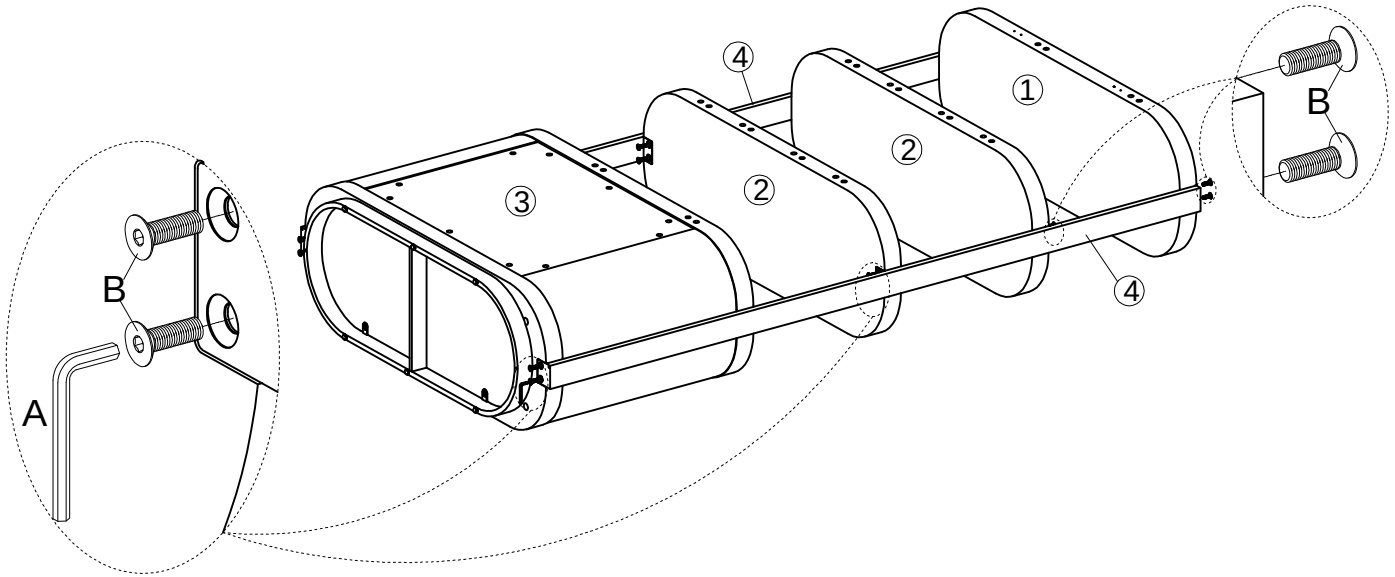

2

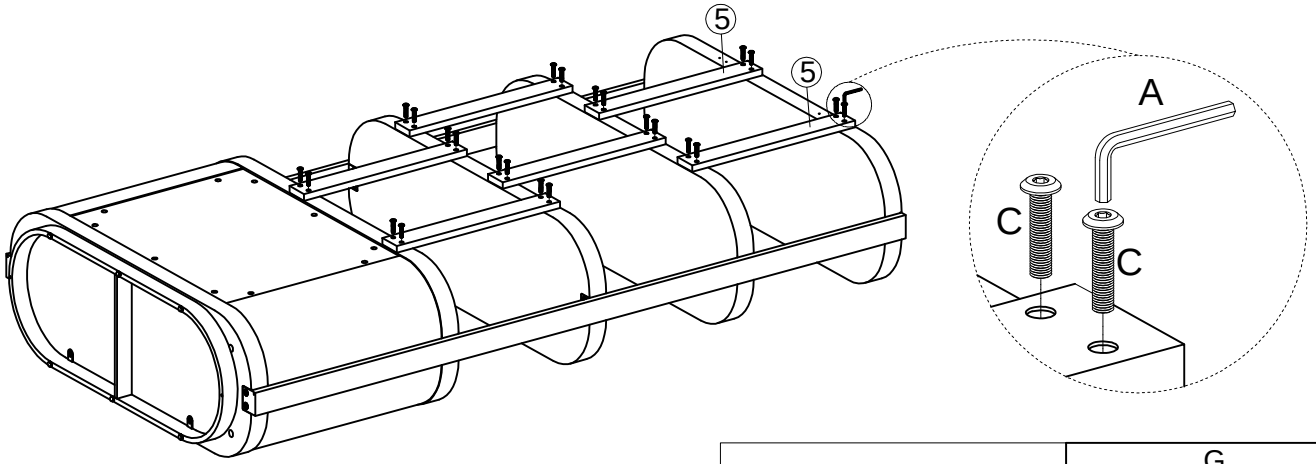

TOOLS NOT INCLUDED	G	H	I
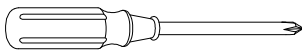	M8x208	Φ17xΦ8*x1.5	Φ25x0.4
	2PCS	2PCS	2PCS

Richmond INTERIORS

ITEM 215101

A	B	C	D	E	F
5MM	M8x25	M8x40	(L2") D1 X 2 Pieces (L3/4") D2 X 2 Pieces D3 X 2 Pieces D4 X 2 Pieces D5 X 1Pieces	160x80x20	M4x22
1PC	16PCS	24PCS	2PCS	2PCS	4PCS

3

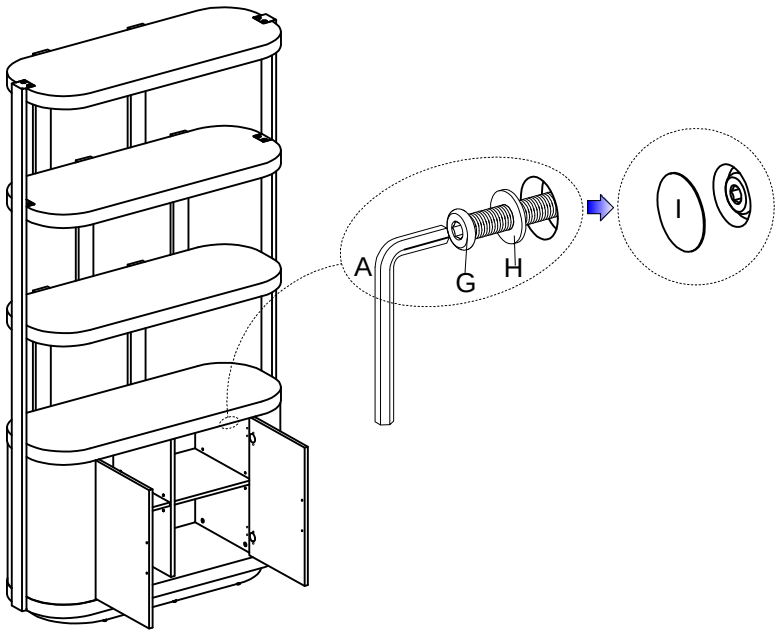

4

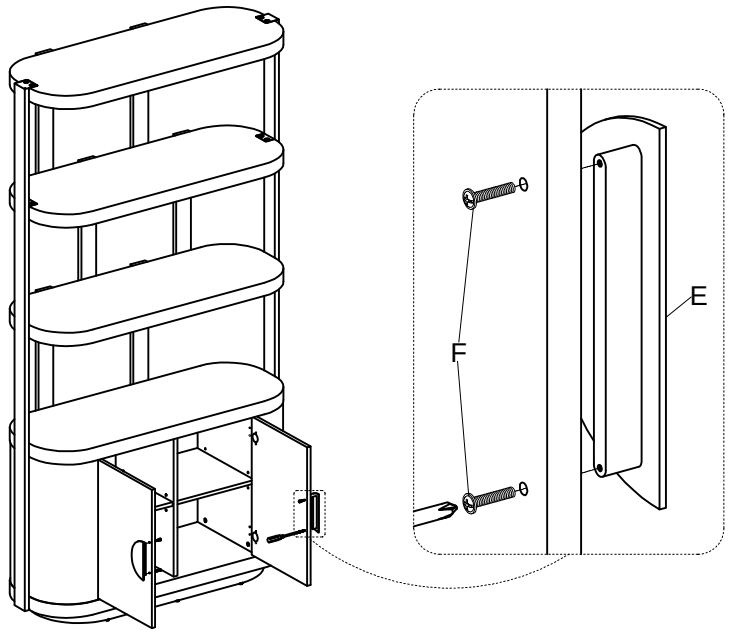

5

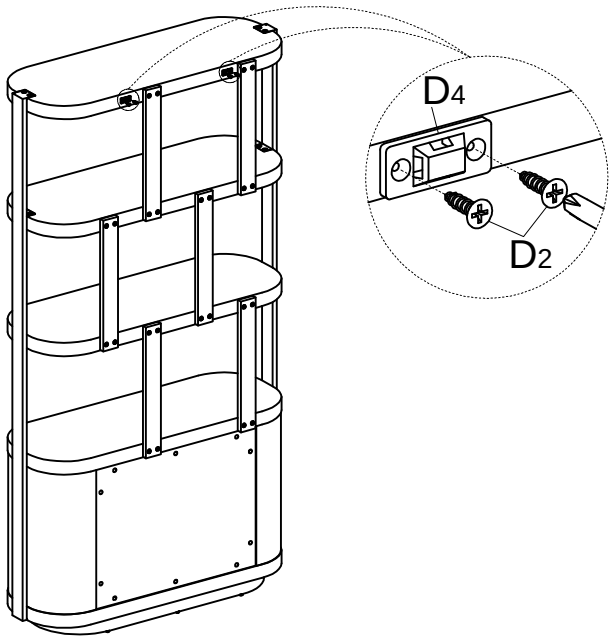

6

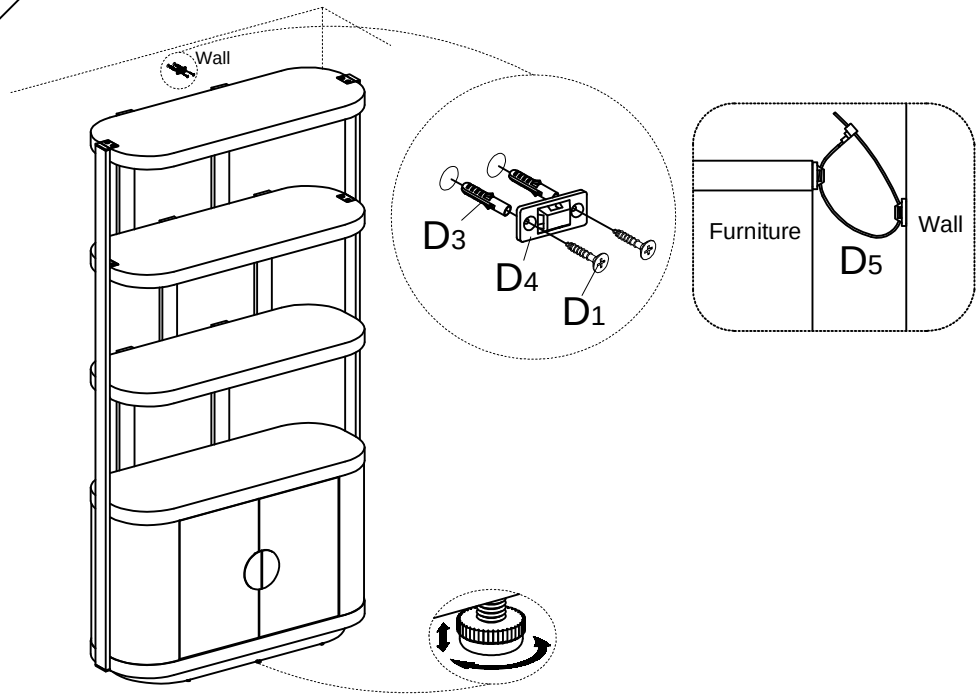

WALNUT VENEER

Care & Maintenance Instructions

Clean spills immediately
Walnut veneer is a thin layer of real walnut wood applied to a core material such as plywood or MDF. If spills occur, blot immediately with a soft cloth to prevent absorption. Avoid rubbing, as this may spread the liquid.

Avoid harsh chemicals
Do not use acidic or abrasive cleaners like ammonia or strong solvents. Stick to mild, non-abrasive cleaning products.

Use soft materials
Clean with a soft microfiber cloth. For stubborn stains, use a mixture of equal parts vinegar and water, then rinse with a damp cloth and dry thoroughly.

Protect from heat and moisture
Use coasters or heat-resistant mats under hot items. Avoid placing wet or damp objects directly on the veneer.

Dust regularly
Wipe with a soft, lint-free cloth to prevent dust buildup and scratches.

Seal periodically
Walnut veneered tabletops come pre-sealed. Depending on use, resealing by a professional is recommended.

Prevent heavy impact
Avoid dropping or dragging heavy objects across the surface to prevent dents or damage.

Indoor use only
This product is for indoor use. Outdoor exposure can cause damage.

Scratch sensitivity
Use placemats or tablecloths to protect against scratches. Avoid sharp or heavy items on the surface.

By following these simple steps, your walnut veneer furniture will remain beautiful and well-maintained for years to come.

Richmond
INTERIORS